# Installation manual
# Tumble dryer

## TD7–7, TD7–6LAC

### Type N1130..

Original instructions

438941000/GB, IE
2026.10.15

# Contents


1 Safety Precautions ....5
1.1 General safety information ....6
1.2 Commercial use only ....6
1.3 Copyright ....6
1.4 Ergonomics certification ....7
1.5 Symbols ....7
2 Warranty terms and exclusions ....8
3 Technical data ....9
3.1 Drawing ....9
3.2 Technical data ....10
3.3 Connections ....10
4 Setup ....11
4.1 General ....11
4.2 Unpacking ....11
4.3 Recycling instruction for packaging ....12
4.4 Siting ....13
4.5 Mechanical installation ....14
5 Marine installation ....15
6 Evacuation system ....16
6.1 Air principle ....16
6.2 Fresh air ....17
6.3 Exhaust duct ....18
6.4 Shared exhaust duct ....19
6.5 Exhaust dimensioning ....20
7 Electrical connection ....21
7.1 Electrical installation ....21
7.2 Single-phase connection ....22
7.3 Three-phase connection ....23
7.4 Electrical connections ....25
7.5 Functions for I/O-boards ....26
7.5.1 Enable start ....26
7.5.2 Remote start/stop ....27
7.5.3 Free start ....28
7.6 Option ....29
7.6.1 External connection 100 mA ....29
8 Reversing the door ....30
9 Stacking kit ....32
9.1 Stacking kit for WP7–6 with TD7–7, TD7–6LAC ....32
9.1.1 Contents of the kit ....32
9.1.2 Installing the stacking kit ....33
9.2 Stacking kit for WP7–7, WP7–8 with TD7–7, TD7–6LAC ....37
9.2.1 Contents of the kit ....37
10 Function check ....42
10.1 Check the automatic stop of the machine ....42
10.2 Check the heat ....42
10.3 Ready to use ....42
11 Disposal information ....43
11.1 Appliance recyclability and disposal ....43
11.1.1 Recyclability ....43
11.1.2 Procedure regarding appliance disposal and component / material recovery ....43
11.2 Disposal of packing ....43


The manufacturer reserves the right to make changes to design and component specifications.

## 1 Safety Precautions

- Servicing shall be carried out only by authorized personnel.
- Only authorized spare parts, accessories and consumables shall be used.
- The machine is not to be used if industrial chemicals have been used for cleaning.
- Do not dry unwashed items in the machine.
- WARNING: Items that have been soiled with substances such as hair care products, cooking oil, acetone, alcohol, petrol, kerosene, spot removers, turpentine, waxes and wax removers shall be cleaned sufficiently to remove the contaminant before being tumble dried. When washing such soiled items ensure the use of detergent as specified by the detergent manufacturer and select the highest suitable temperature. If in doubt, wash the items several times.
- Items such as foam rubber (latex foam), shower caps, waterproof textiles, rubber backed articles and clothes or pillows fitted with foam rubber pads should not be dried in the machine.
- Fabric softeners or similar products should be used as specified by the fabric softener instructions.
- The final part of a drying cycle occurs without heat (cool down cycle) to ensure that the items are left at a temperature that ensures that the items will not be damaged.
- Remove all objects from pockets such as lighters and matches.
- WARNING. Never stop the machine before the end of the drying cycle unless all items are quickly removed and spread out so that the heat is dissipated.
- Adequate ventilation has to be provided to avoid the back flow of gases into the room for appliances burning other fuels, including open fires.
- Exhaust air must not be discharged into a flue which is used for exhausting fumes from appliances burning gas or other fuels.
- The machine must not be installed behind a lockable door, a sliding door or a door with a hinge on the opposite side to that of the machine in such a way that a full opening of the machine is restricted.
- If the machine has a lint trap this has to be cleaned frequently.
- The lint must not be accumulated around the machine.
- DO NOT MODIFY THIS APPLIANCE.
- When performing service or replacing parts, the power must be disconnected.
- When the power is disconnected, the operator must see that the machine is disconnected (that the plug is removed and remains removed) from any point to which he has access. If this is not possible, due to the construction or installation of the machine, a disconnection with a locking system in the isolated position shall be provided.
- In accordance with the wiring rules: mount a multi-pole switch prior to the machine to facilitate installation and service operations.
- WARNING: The appliance must not be supplied through an external switching device, such as a timer, or connected to a circuit that is regularly switched on and off by a utility.
- If different rated voltages or different rated frequencies (separated by a /) are stated at the machine data plate, instructions for adjusting the appliance for operation at the required rated voltage or rated frequency are stated in the installation manual.
- Stationary appliances not fitted with means for disconnection from the supply mains having a contact separation in all poles that provide full disconnection under

overvoltage category III, means for disconnection must be incorporated in the fixed wiring in accordance with the wiring rules.

- The openings in the base, shall not be obstructed by a carpet.
- Oil-affected items can ignite spontaneously, especially when exposed to heat sources such as in a tumble dryer. The items become warm, causing an oxidation reaction in the oil. Oxidation creates heat. If the heat cannot escape, the items can become hot enough to catch fire. Piling, stacking or storing oil-affected items can prevent heat from escaping and so create a fire hazard.
- Maximum mass of dry cloth: 8 kg.
- A-weighted emission sound pressure level at working stations: 70 dB(A).
- The tumble dryer can be placed on top of a washer extractor (WP7–6, WP7–7, WP7–8).
- Additional requirements for the following countries; AT, BE, BG, HR, CY, CZ, DK, EE, FI, FR, DE, GR, HU, IS, IE, IT, LV, LT, LU, MT, NL, NO, PL, PT, RO, SK, SI, ES, SE, CH, TR, UK:
  - The appliance can be used in public areas.
  - This appliance can be used by children aged from 8 years and above and persons with reduced physical, sensory or mental capabilities or lack of experience and knowledge if they have been given supervision or instruction concerning use of the appliance in a safe way and understand the hazards involved. Children shall not play with the appliance. Cleaning and user maintenance shall not be made by children without supervision.
  - Children of less than 3 years should be kept away unless continuously supervised.
- Additional requirements for other countries:
  - This appliance is not intended for use by persons (including children) with reduced physical, sensory or mental capabilities, or lack of experience and knowledge, unless they have been given supervision or instruction concerning use of the appliance by a person responsible for their safety. Children should be supervised to ensure that they do not play with the appliance.

## 1.1 General safety information

In order to prevent damage to the electronics (and other parts) that may occur as the result of condensation, the machine should be placed in room temperature for 24 hours before being used for the first time.

## 1.2 Commercial use only

The machine/machines covered by this manual is/are made for commercial and industrial use only.

## 1.3 Copyright

This manual is intended solely for consultation by the operator and can only be given to third parties with the permission of Electrolux Professional AB company.

## 1.4 Ergonomics certification

The human body is designed for movement and activity but physical stress injuries as a result of static and repetitive movements or unfavorable working postures may occur.

The ergonomic features of your product, the ones which may influence your physical and cognitive interaction with it, have been assessed and certified.

A product which exhibits ergonomic features, in fact, shall fulfil specific ergonomic requirements, belonging to three different areas: Polytechnic, Biomedical and Psychosocial (usability and satisfaction).

For each of these areas, specific tests with real users have been performed. The product was therefore compliant with the ergonomic acceptability criteria requested by the standards.

In case several machines are managed by the same operator the repetitive movements will increase and as a consequence of this the related biomechanical risk will increase exponentially.

The possible postural risks are the interaction with the door handle in case the machine is placed directly on the floor without a base and with the door handle and the user interface, display and knob, in case the machine is placed on top of a washing machine.

Follow the below recommendations to avoid, as much as possible, operators acquiring bodily injury.

- Place the machine on a base instead of directly on the floor so that the operator does not need to bend his/her back unnecessarily when loading and unloading.
  Minimum suggested height of bases is 300 mm.
- Make sure there are suitable trolleys or baskets for loading, unloading and transportation.
- Organize job rotation in the working place in the case several machines are managed by the same operator.

## 1.5 Symbols

| | |
|---|---|
| | Caution |
| | Caution, hot surface |
| | Caution, high voltage |
| | Warning, risk of fire / flammable material |
| | Danger, crush hazard |
| 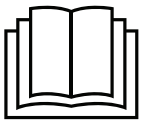 | Read the instructions before using the machine |

## 2 Warranty terms and exclusions

If the purchase of this product includes warranty coverage, warranty is provided in line with local regulations and subject to the product being installed and used for the purposes as designed, and as described within the appropriate equipment documentation.

Warranty will be applicable where the customer has used only genuine spare parts and has performed maintenance in accordance with Electrolux Professional AB user and maintenance documentation made available in paper or electronic format.

Electrolux Professional AB strongly recommends using Electrolux Professional AB approved cleaning, rinse and descaling agents to obtain optimal results and maintain product efficiency over time.

The Electrolux Professional AB warranty does not cover:

- service trips cost to deliver and pick up the product;
- installation;
- training on how to use/operate;
- replacement (and/or supply) of wear and tear parts unless resulting from defects in materials or workmanship reported within one (1) week from the failure;
- correction of external wiring;
- correction of unauthorized repairs as well as any damages, failures and inefficiencies caused by and/or resulting from;
  - insufficient and/or abnormal capacity of the electrical systems (current/voltage/frequency, including spikes and/or outages);
  - inadequate or interrupted water supply, steam, air, gas (including impurities and/or other that does not comply with the technical requirements for each appliance);
  - plumbing parts, components or consumable cleaning products that are not approved by the manufacturer;
  - customer’s negligence, misuse, abuse and/or non-compliance with the use and care instructions detailed within the appropriate equipment documentation;
  - improper or poor: installation, repair, maintenance (including tampering, modifications and repairs carried out by third parties not authorized third parties) and modification of safety systems;
  - Use of non-original components (e.g.: consumables, wear and tear, or spare parts);
  - environment conditions provoking thermal (e.g. overheating/freezing) or chemical (e.g. corrosion/oxidation) stress;
  - foreign objects placed in- or connected to- the product;
  - accidents or force majeure;
  - transportation and handling, including scratches, dents, chips, and/or other damage to the finish of the product, unless such damage results from defects in materials or workmanship and is reported within one (1) week of delivery unless otherwise agreed;
- product with original serial numbers that have been removed, altered or cannot be readily determined;
- replacement of light bulbs, filters or any consumable parts;
- any accessories and software not approved or specified by Electrolux Professional AB.

Warranty does not include scheduled maintenance activities (including the parts required for it) or the supply of cleaning agents unless specifically covered within any local agreement, subject to local terms and conditions.

Check on Electrolux Professional AB website the list of authorized customer care.

# 3 Technical data

## 3.1 Drawing

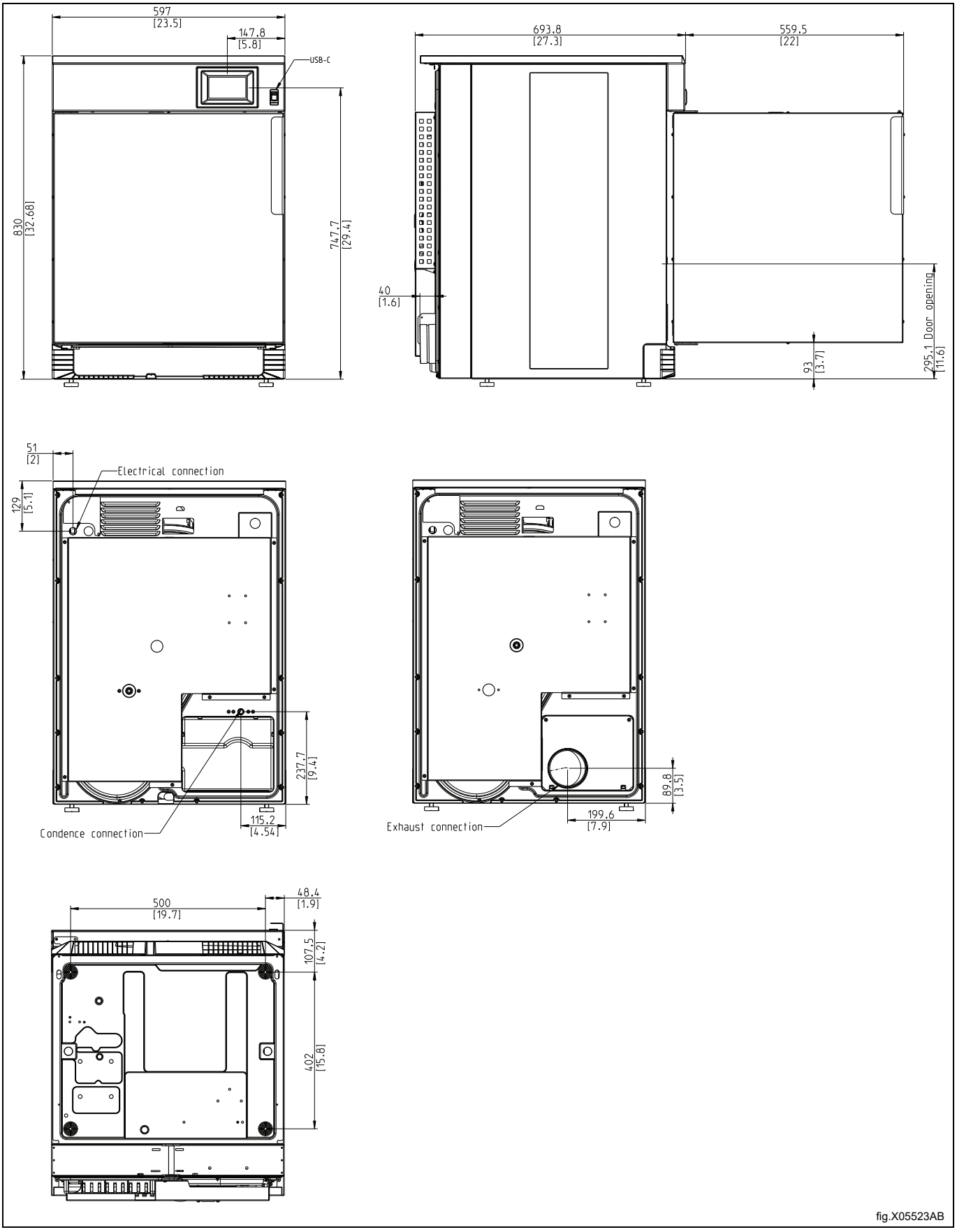


* Adjustable height: + 25 mm.

## 3.2 Technical data

| | | Exhaust | Condense |
|---|---|---|---|
| Weight, net | kg | 58 | 57 |
| Drum volume | litres | 130 | 130 |
| Drum diameter | mm | 575 | 575 |
| Drum depth | mm | 500 | 500 |
| Drum speed, medium load | rpm | 53 | 53 |
| G-factor, max. | | 0.9 | 0.9 |
| Rated capacity, filling factor 1:16 (Max. load) | kg | 8 | 8 |
| Rated capacity, filling factor 1:22 (Recommended load) | kg | 6 | 6 |
| Heating: Electricity | kW | 5.1 | 3.0 |
| | kW | 3.2 | |
| A-weighted emission sound pressure level at working stations | dB(A) | 70/70 | 70/70 |
| Heat emission of installed power, max | % | 15 | 15 |
| Standard conditions:<br>Ambient operating temperature, with a max relative humidity<br>Ambient operating temperature, with a max relative humidity | <br>°C /%RH<br>°C /%RH | <br>+1— +32°C / 95%<br>+32— +40°C / 60% | <br>+1— +25 °C / 95%<br>- |
| Harsh conditions:[1]<br>Ambient operating temperature, with a max relative humidity | <br>°C /%RH | <br>+40— +45°C / 60% | <br>- |

1. Harsh conditions will in a not insignificant manner affect the machine's function, lifetime, performance, etc.

## 3.3 Connections

| | | Exhaust | Condense |
|---|---|---|---|
| Air outlet | ⌀ mm | 100 | - |
| Condensate outlet | | - | 1/2” |

# 4 Setup

## 4.1 General

The principle work flow to setup or install this machine is as follows:

1. Unpacking
2. Positioning/siting, levelling or/and securing the machine.
3. Correcting the fresh air to compensate the heat emission of machine(s) and connect the drain(s).
4. Electric connections, connect the power supply to the machine.
5. Function check.
6. Option functions check.

More details are described in each part of this installation manual.

## 4.2 Unpacking

Remove the machine from the pallet.

**Note!**

**When moving the machine, handle it with care. The drum has no transport clamps.**

Place the machine on its final position.

## 4.3 Recycling instruction for packaging

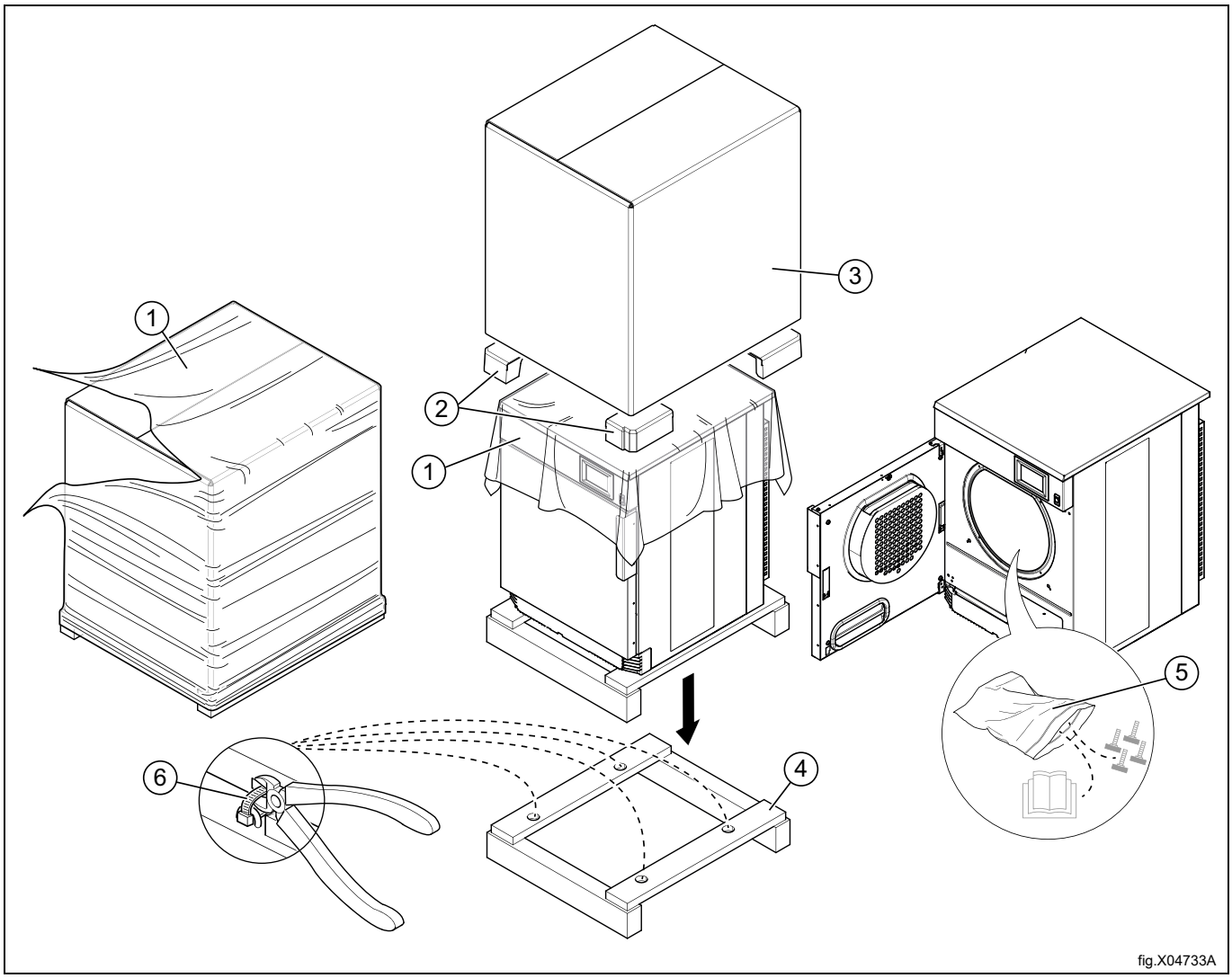


| Fig. | Description | Code | Type |
|---|---|---|---|
| 1 | Wrapping film | LDPE 4 | Plastics |
| 2 | Corner protection | PS 6 | Plastics |
| 3 | Cardboard packaging | PAP 20 | Paper |
| 4 | Pallet | FOR 50 | Wood |
| 5 | Plastic bag | PET 1 | Plastics |
| 6 | Cable Tie<br>(Only for Marine) | | Nylon |

## 4.4 Siting

The machine should be positioned so that there is plenty of room for working, both for the user and service personnel.

The figure shows minimum distance to a wall and/or other machines. Failure to respect the prescribed distances will prevent easy access for maintenance and service operations.

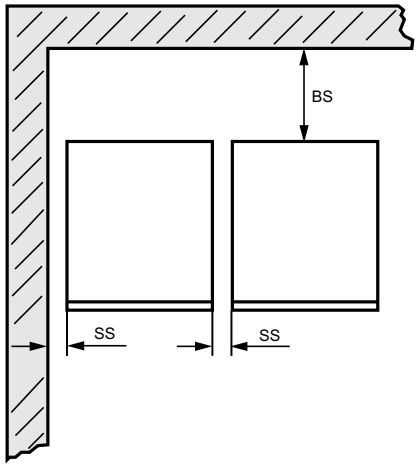


fig.X05272

| | |
|---|---|
| SS | ≥ 50 mm |
| BS | ≥ 500 mm |

### Note!

**The machine should be positioned so that there will be enough space for working, both for the user and service personnel.**

Respecting the given recommendations will provide easy access for maintenance and service operations.

In case of space limitations, it is possible to install machines without respecting to the given recommendations. If so, keep in mind that it might be necessary to disconnect and move other machines to be able to reach and perform service on affected machine.

## 4.5 Mechanical installation

Level the machine with the feet of the machine. The maximum height adjustment of the feet is 25 mm.

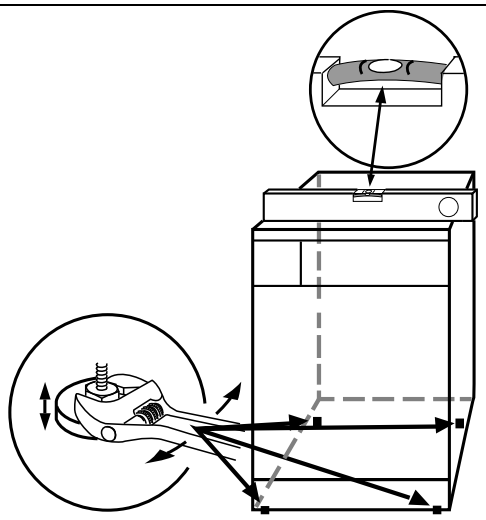

fig.W00177

# 5 Marine installation

## Note!

**The machine must be secured to the floor when it is installed on a ship, oil rig or wherever there is a high risk**
**of earthquake.**
**The secure brackets kit (988918598 or 487193545) is an alternative solution and it can be ordered separately. The screw is excluded in the kit. Use screws sourced locally that are suitable for the floor type.**

The following illustration is just shown as an example.

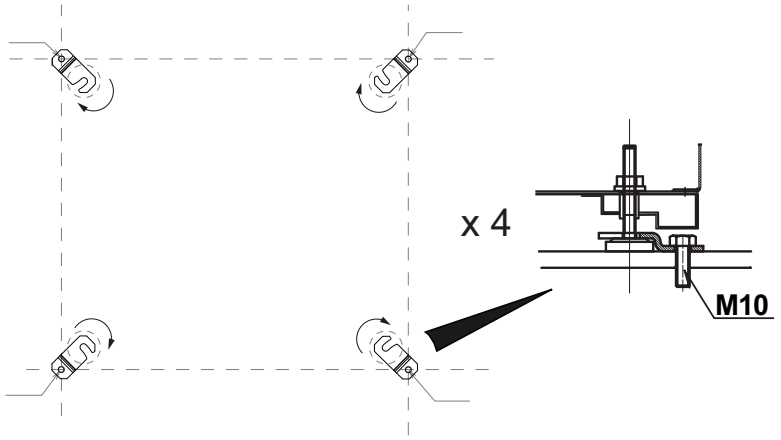


fig.X04999

# 6 Evacuation system

## 6.1 Air principle

The condensate machine does not have evacuation of air into the open.

The air is circulated in a closed system between the machine and the condensing unit. The water in the garments condenses in the condensing unit and is led out to the drain. The drain hose shall hang freely with a gentle bend.

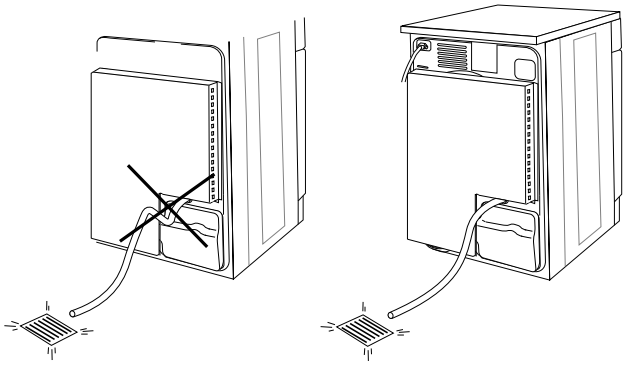

fig.W00203A

**Exhaust model:**

The fan creates low pressure in the machine, drawing air into the drum via the heating unit.

The heated air passes through the garments and the drum holes.

The air then flows out through a lint filter positioned in the door. After this, the air is evacuated through the fan and exhaust system.

**Note!**

**It is very important that the machine gets enough fresh air in order to get the best drying result.**

## 6.2 Fresh air

For maximum efficiency and the shortest possible drying time, it is important to ensure that fresh air is able to enter the room from the outside in the same volume as that is blown out of the room.

To avoid draught in the room it is important to place the air inlet behind the machine.

Provisions for adequate air supply:

- The area of the air inlet opening is recommended to be five times the size of the exhaust pipe area. The area of the inlet opening is the area through which the air can flow without resistance from the grating/slatted cover.

The resistance in the grating/slats on the air inlet cover panel should not exceed 10 Pa (0.1 mbar).

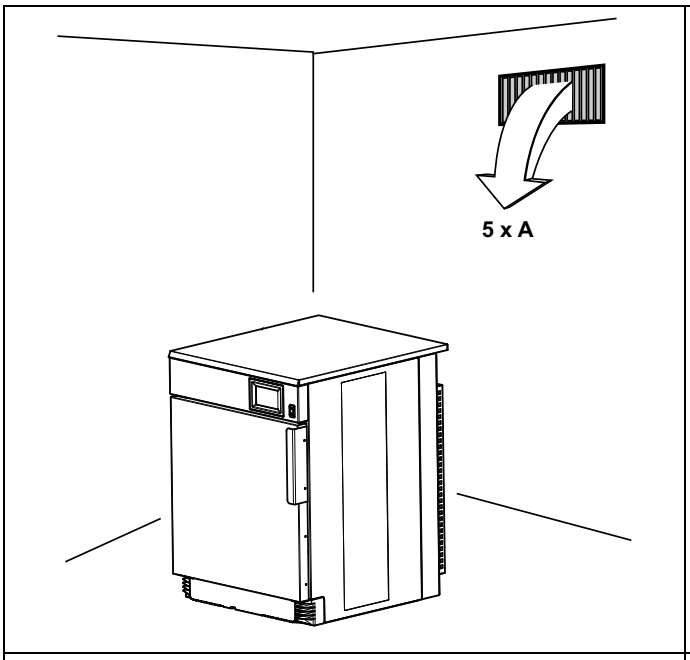


Condense model

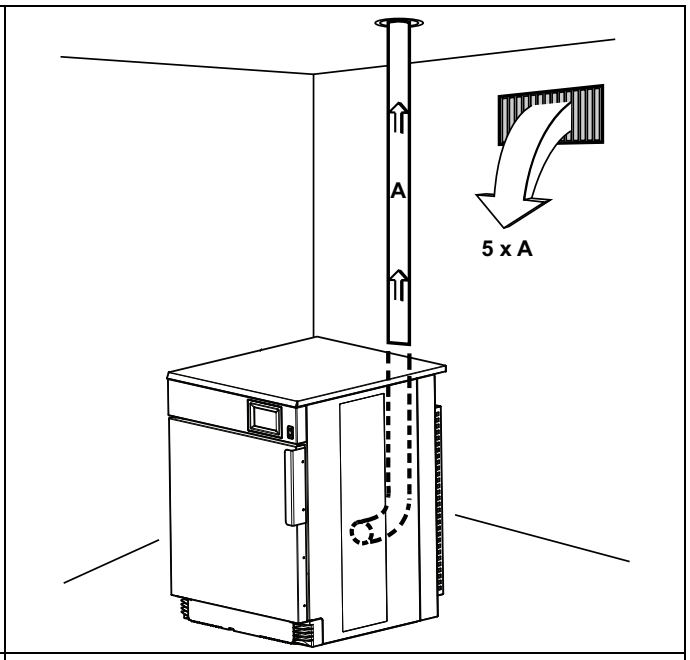


Exhaust model

### Note!

**Gratings/slatted covers often block half of the total fresh air vent area. Remember to take this into account.**

## 6.3 Exhaust duct

- Only rigid or flexible metal duct should be used for exhausting.
- Plastic ducting is not to be used.
- Recommended material for exhaust is galvanized steel.
- The duct is not to be assembled with screws or other fastening means that extend into the duct and catch lint, instead use for example clamps and high temperature silicone.
- The exhaust air should not be vented into a wall, a ceiling, or a concealed space of building.
- The exhaust duct must lead clear of the building as condensation may cause frost damage to the building.
- The exhaust duct must lead to the outdoors.
- The exhaust duct must be placed in such a way that it is protected on the outside from for example impacts or water ingress.
- The exhaust duct must be smooth on the inside (low air resistance).
- The exhaust duct must have gentle bends.

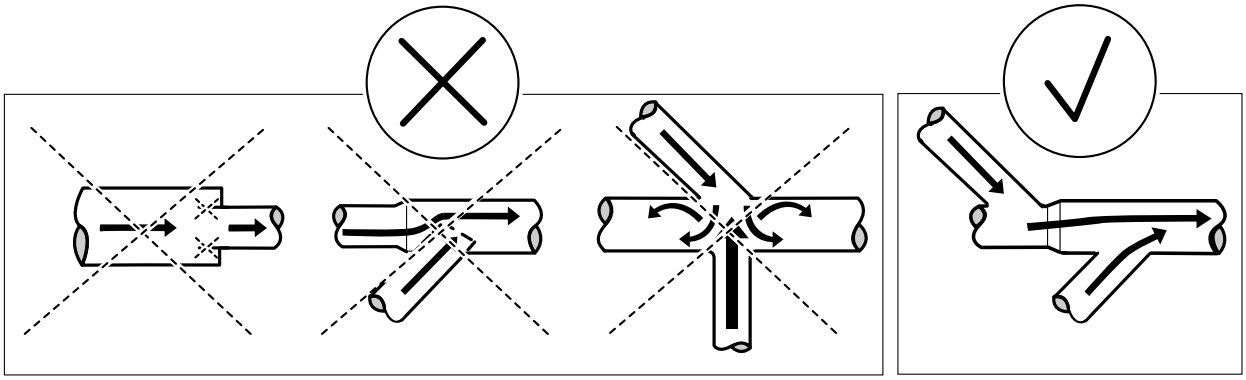

fig.W00049

## 6.4 Shared exhaust duct

It is recommended that each machine is connected to a separate exhaust duct.

When several machines shall use the same exhaust duct the exhaust duct must increase after each machine. The recommended diameter increase progression is the one in the table.

If several machines are installed on the same exhaust pipe, it is recommended to adjust the airflow on the machines when all machines are started and running a program with no heat.

Please consider that unnecessarily large ducts create issues with the draught.

The exhaust duct must have a nonreturn flap after each dryer.

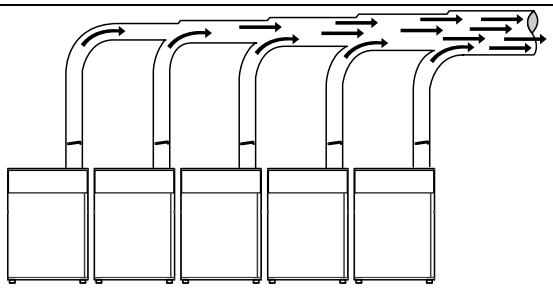

fig.6329

| Number of machines | | 1 | 2 | 3 | 4 | 5 | 6 | 7 | 8 | 9 | 10 |
|---|---|---|---|---|---|---|---|---|---|---|---|
| Exhaust duct | ⌀ mm | 100 | 160 | 200 | 200 | 250 | 250 | 315 | 315 | 315 | 315 |
| Recommended area of fresh air intake | $m^2$ | 0.04 | 0.1 | 0.16 | 0.16 | 0.25 | 0.25 | 0.39 | 0.39 | 0.39 | 0.39 |
| Minimum area of fresh air intake | $m^2$ | 0.011 | 0.022 | 0.033 | 0.044 | 0.055 | 0.066 | 0.077 | 0.088 | 0.099 | 0.11 |

The exhaust duct diameter must not be reduced.

## 6.5 Exhaust dimensioning

It is important that the machine has correct air volume compared to each machines power.

If the air flow is smaller or larger this will result in a longer drying period or will lower the performance of the machine.

If the outlet pipe is long or the ventilation is not properly designed it is recommended to clean the outlet pipes periodically. Usually, longer ducts need more frequent cleaning. If the outlet pipe has too high back pressure it is recommended to install an exhaust fan.

The exhaust pipes shall be short in order for the machine to work in the best way.

All cover panels must be mounted in order for the machine to work in the best way.

The exhaust duct must be designed so the static back pressure measured in the hole for the NTC-sensor does not exceed the maximum allowable back pressure specified in “Technical data”.

# 7 Electrical connection

## 7.1 Electrical installation

The electrical installation may only be carried out by qualified personnel.

Machines with frequency-controlled motors can be incompatible with certain types of earth leakage circuit breaker. It is important to know that the machines are designed to provide a high level of personal safety, which is why items of external equipment such as earth leakage circuit breakers are not necessary but is recommended. If you still want to connect your machine across an earth leakage circuit breaker, please remember the following:

- contact a skilled, authorised installation company to ensure that the appropriate type of breaker is chosen and that the dimensioning is correct
- for maximum reliability, connect only one machine per earth leakage circuit breaker
- it is important that the earth wire is properly connected.

In instances where the machine is not equipped with an all pole switch, one must be installed beforehand.

In accordance with the wiring rules: mount a multi-pole switch prior to the machine to facilitate installation and service operations.

The connecting cable shall hang in a gentle curve.

For AU/NZ: Fixed wiring is in accordance with AS/NZS 3000.

## 7.2 Single-phase connection

Demount the cover panel from the supply unit. Connect the earth and other wires as shown.

**Exhaust model**

| | |
|---|---|
| 208–240V 1~ 3.2kW | 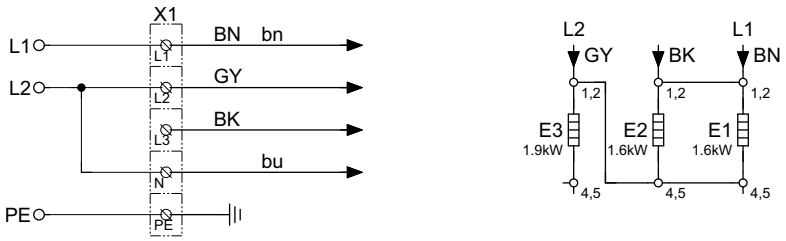 |
| 220–240V 1N~ 3.2kW | 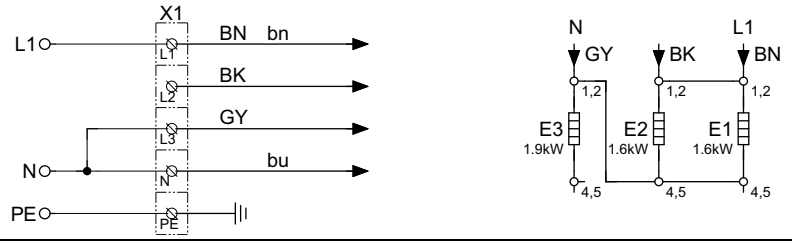 |
| 220–240V 1N~ 3.5kW | 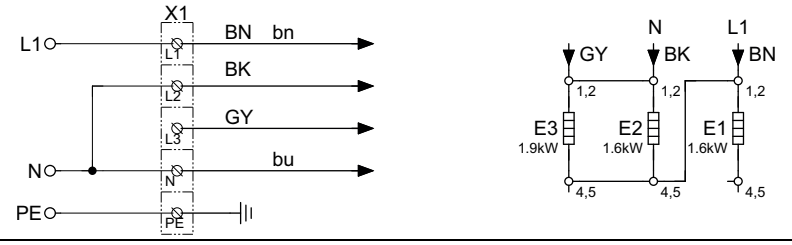 |

**Condense model**

| | |
|---|---|
| 208–240V 1~ 3.0kW | 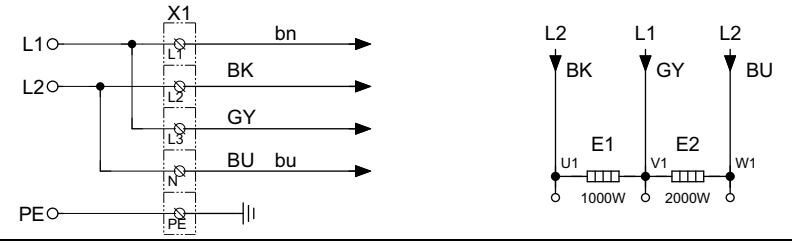 |
| 220–240V 1N~ 3.0kW | 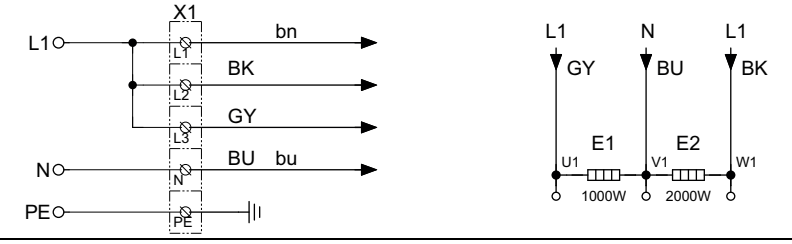 |

When the installation is completed remount the cover panel and check:

- That the drum is empty.
- That the machine operates by connecting the power to the machine and start a program with heat.

## 7.3 Three-phase connection

Demount the cover panel from the supply unit. Connect the earth and other wires as shown.

**Exhaust model**

| | |
|---|---|
| 380–415V 3N~ 3.2kW | 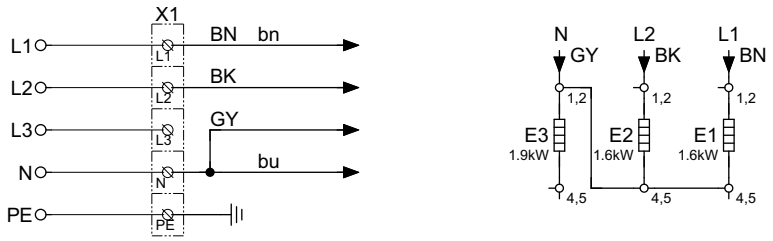 |
| 200–240V 3~ 5.1kW | 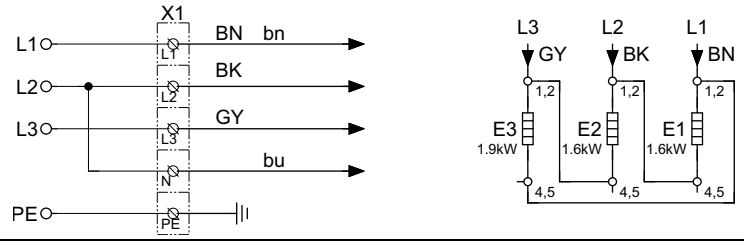 |
| 380–440V 3~ 5.1kW | 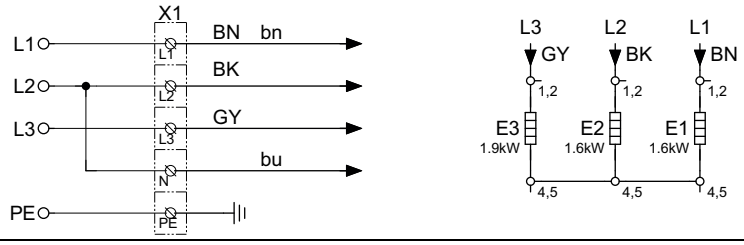 |
| 440V 3~ 2.6kW | 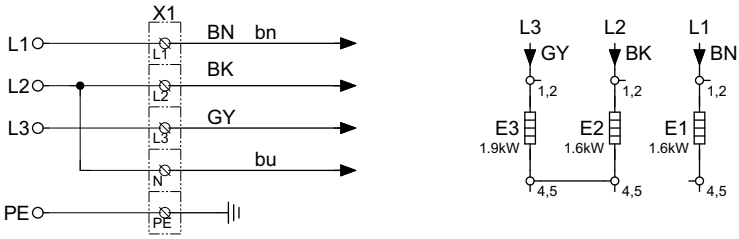 |
| 380–415V 3N ~ 5.1kW | 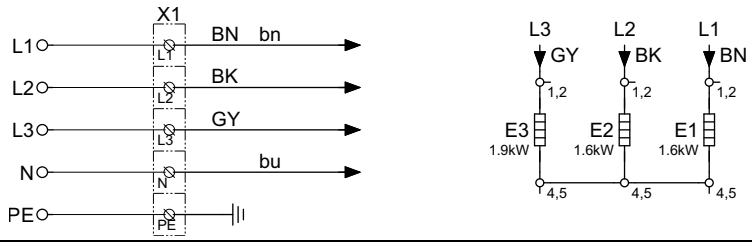 |

**Condense model**

| | |
|---|---|
| 380–415V 3N~ 3.0kW | 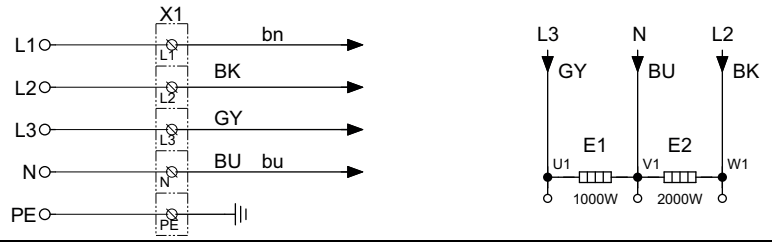 |
| 200–240V 3~ 3.0kW | 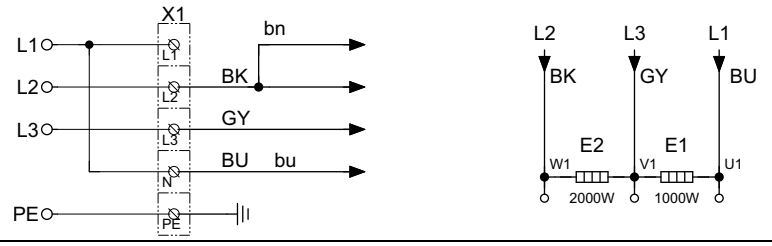 |
| 380–440V 3N~ 3.0kW | 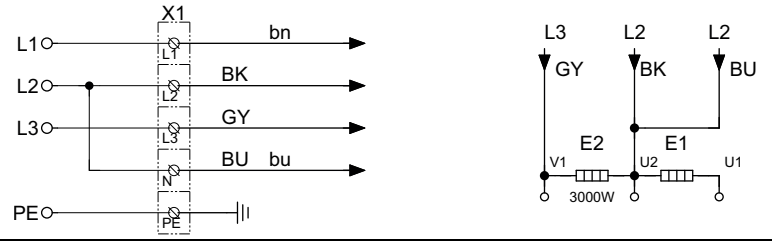 |

When the installation is completed remount the cover panel and check:

- That the drum is empty.
- That the machine operates by connecting the power to the machine and start a program with heat.

## 7.4 Electrical connections

| Electrical connections | | | | | |
|---|---|---|---|---|---|
| Heating alternative | Main voltage | Hz | Heating power kW | Total power kW | Recommended fuse A |
| Electric heating | 220–240V 1/1N~ | 50/60 | 3.2 | 3.5 | 16 |
| | 220-240V 3~ | 50/60 | 5.1 | 5.4 | 16 |
| | 380–415 3~ | 50/60 | 5.1 | 5.4 | 10 |
| | 440V 3~ | 50/60 | 5.1 | 5.4 | 10 |
| | 480V 3~ | 60 | 5.1 | 5.4 | 10 |
| | 220V 3~ | 60 | 4.7 | 5.0 | 16 |
| | 380V 3/3N~ | 60 | 4.6 | 4.9 | 10 |
| | 440V 3~ | 60 | 2.6 | 2.9 | 10 |
| | 230V 1N~ | 50 | 2.6 | 2.9 | 13 |
| Condense | 220–240V 1/1N~ | 50/60 | 3.0 | 3.3 | 16 |
| | 220-240V 3~ | 50/60 | 3.0 | 3.3 | 13 |
| | 380–415 3~ | 50/60 | 3.0 | 3.3 | 10 |
| | 440V 3~ | 50/60 | 3.0 | 3.3 | 10 |
| | 220–240V 1/1N~ | 50/60 | 2.7 | 3.0 | 13 |

## 7.5 Functions for I/O-boards

Depending on machine configuration, the inputs are configured according to the following table:

| Connection | |
|---|---|
| Terminal 5 | Enable start |
| Terminal 6 | Remote start /stop |
| Terminal 7 | Coin 1 |
| Terminal 8 | Free start |

The signal level for the inputs can be either 5-24V DC/AC or 100- 240V AC.

For 5-24V, connect the signal reference to terminal 3 and for 100-240V to terminal 4. The potentials on the inputs cannot be mixed!

The electrical schematic can be one of the following:

### 7.5.1 Enable start

This signal can be used to permit the start of the program when the machine is in standby.

Once permission to start has been granted, the signal from the central payment or the booking system must remain active (high) during drying. When the signal gets inactive (low) the machine will abort ongoing program and enter cooling.

To receive the feedback signal from the machine, 230V or 24V must be connected to terminal 19. The feedback signal on terminal 18 will remain active (high) during entire program.

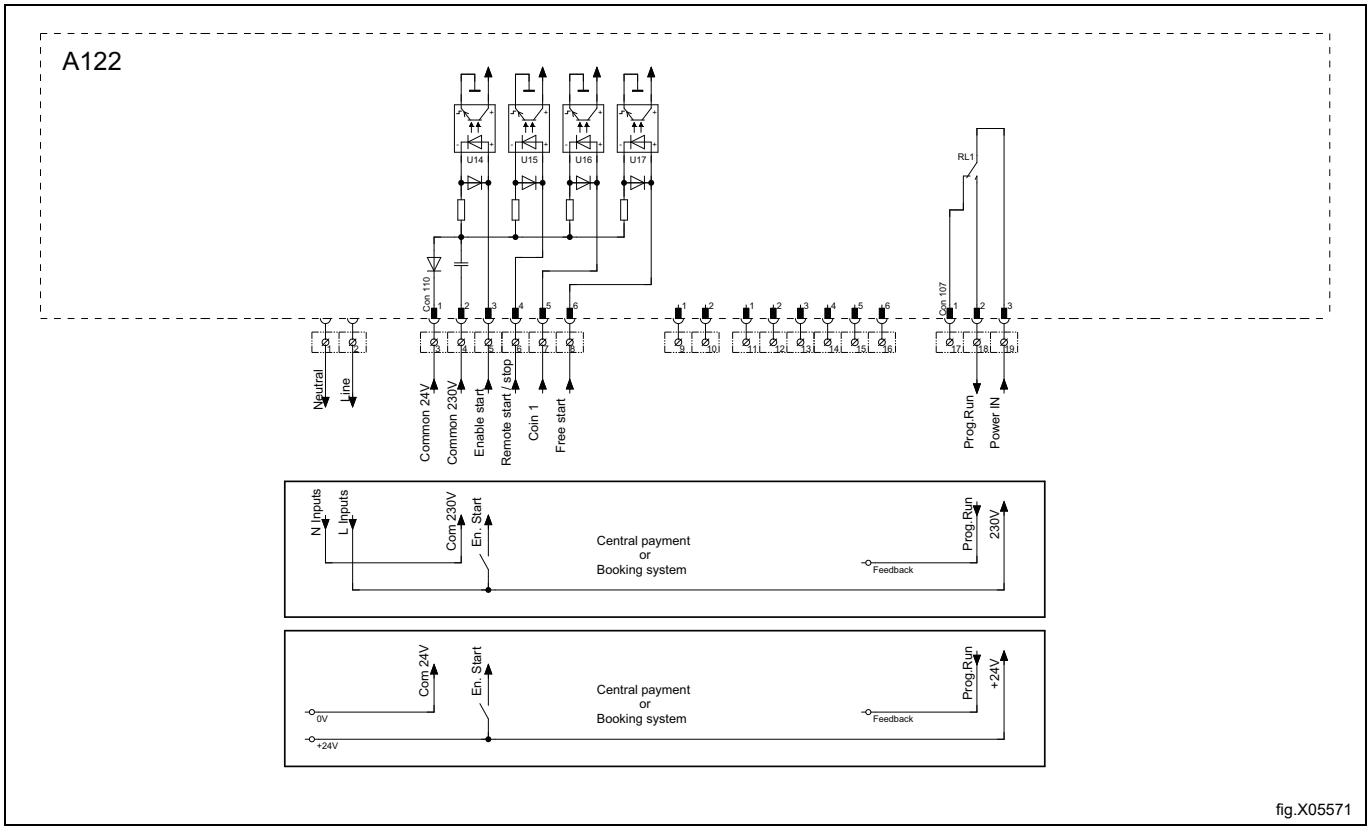


fig.X05571

### 7.5.2 Remote start/stop

This signal can be used to start the program when the machine is in standby, to pause the cycle when running and to continue the cycle when paused.

The central payment system must provide a pulse 750–3000 ms (1000 ms is recommended) to start the program.

To receive the feedback signal from the machine, 230V or 24V must be connected to terminal 19. The feedback signal on terminal 18 will remain active (high) during entire program.

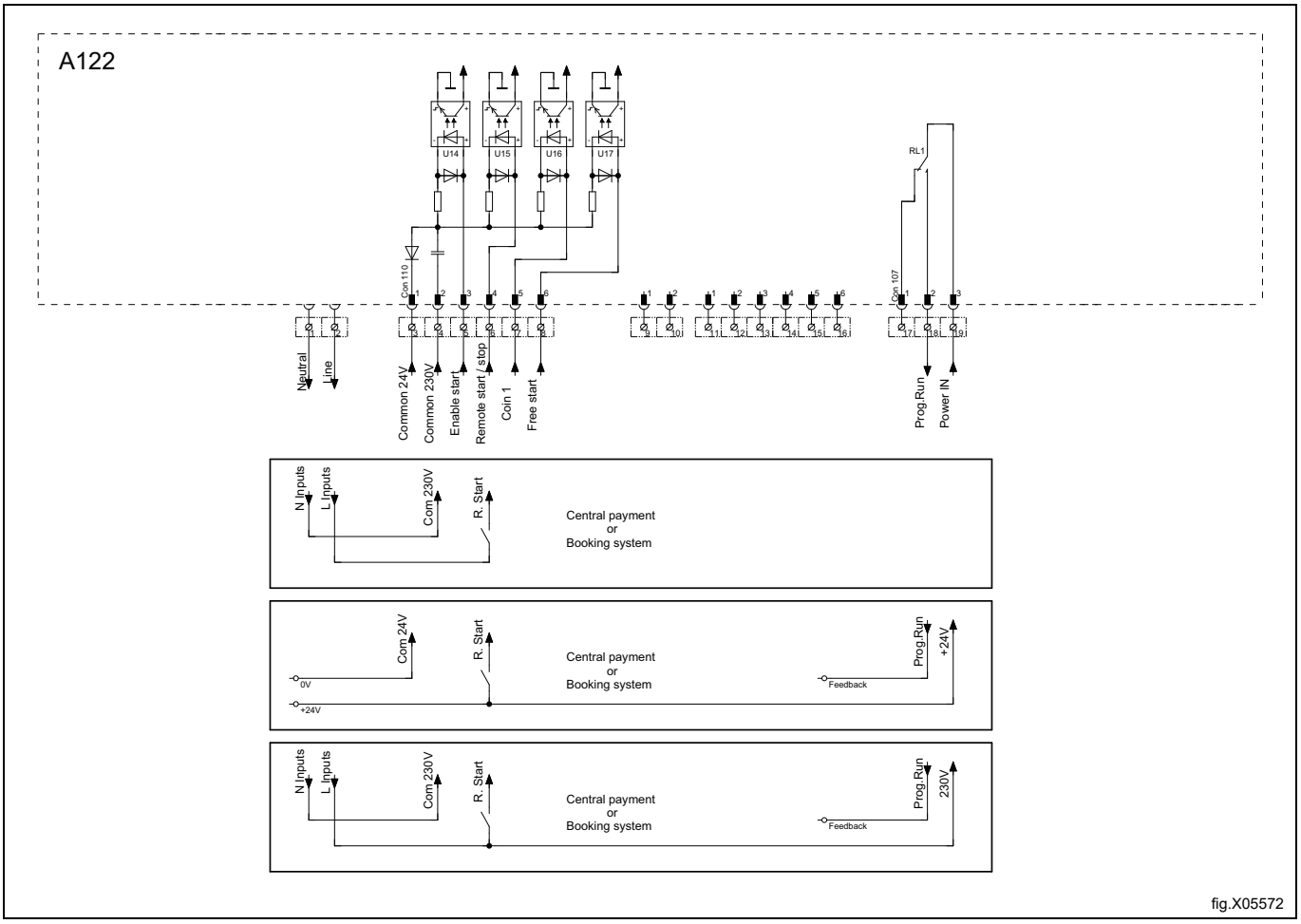


fig.X05572

### 7.5.3 Free start

This signal can be used to be able to start a program without booking or paying when the machine is connected to a booking or a payment system.

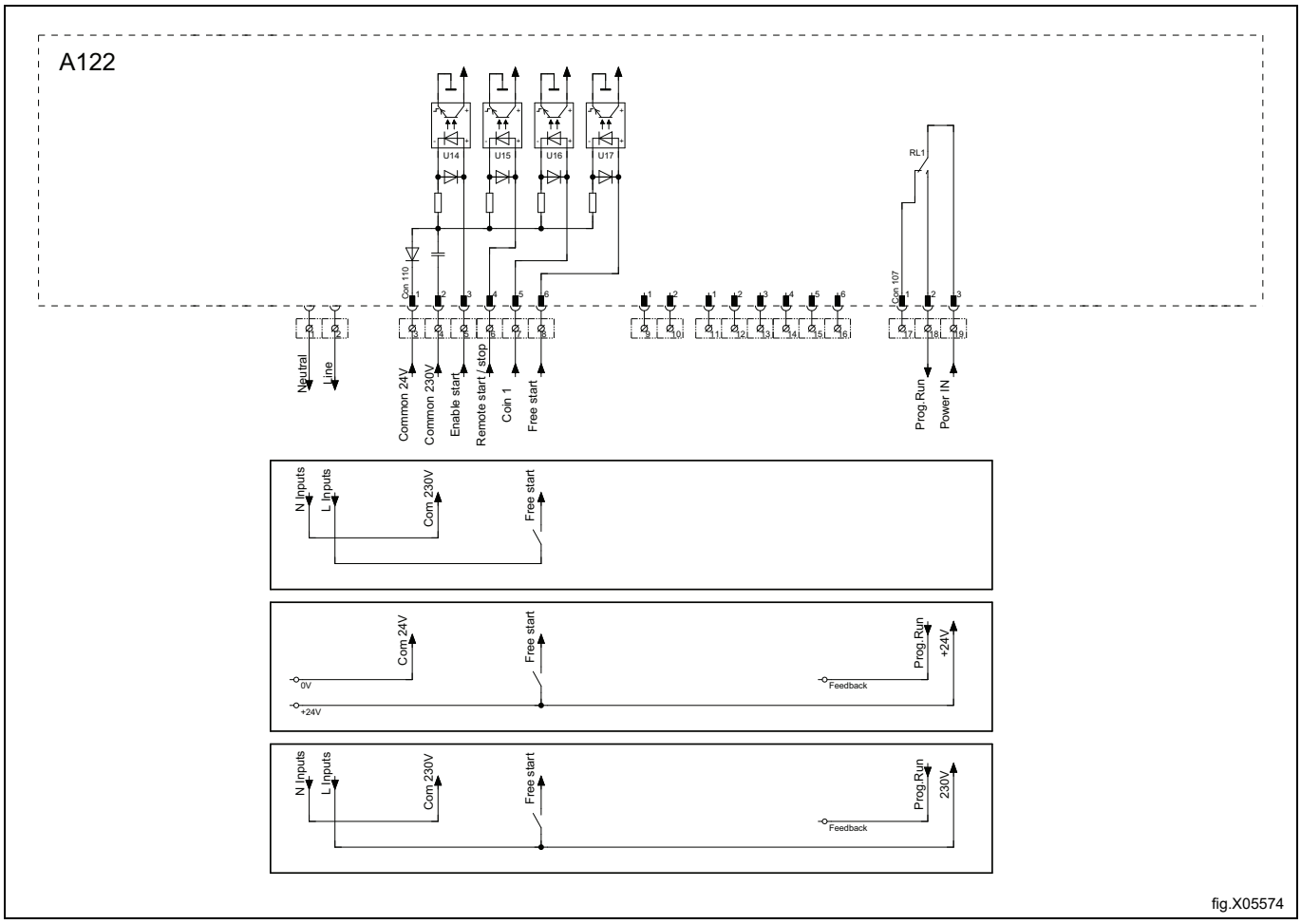


fig.X05574

## 7.6 Option

### 7.6.1 External connection 100 mA

A special connection terminal is located on the connection console.

This connection can be used as external control of a fan.

The terminal for external control is equipped with 220–240V max.100 mA and is intended solely for the operation of a contactor.

Max. connection 100 mA.

Gnd. must not be used for earthing of external board.

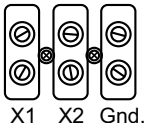


fig.7154

# 8 Reversing the door

- Disconnect the power to the machine.
- Demount the lower hinge and lift off the door.

**Note!**
**Make sure to hold the door in position when loosening the hinge mounting.**

- Demount the upper hinge.

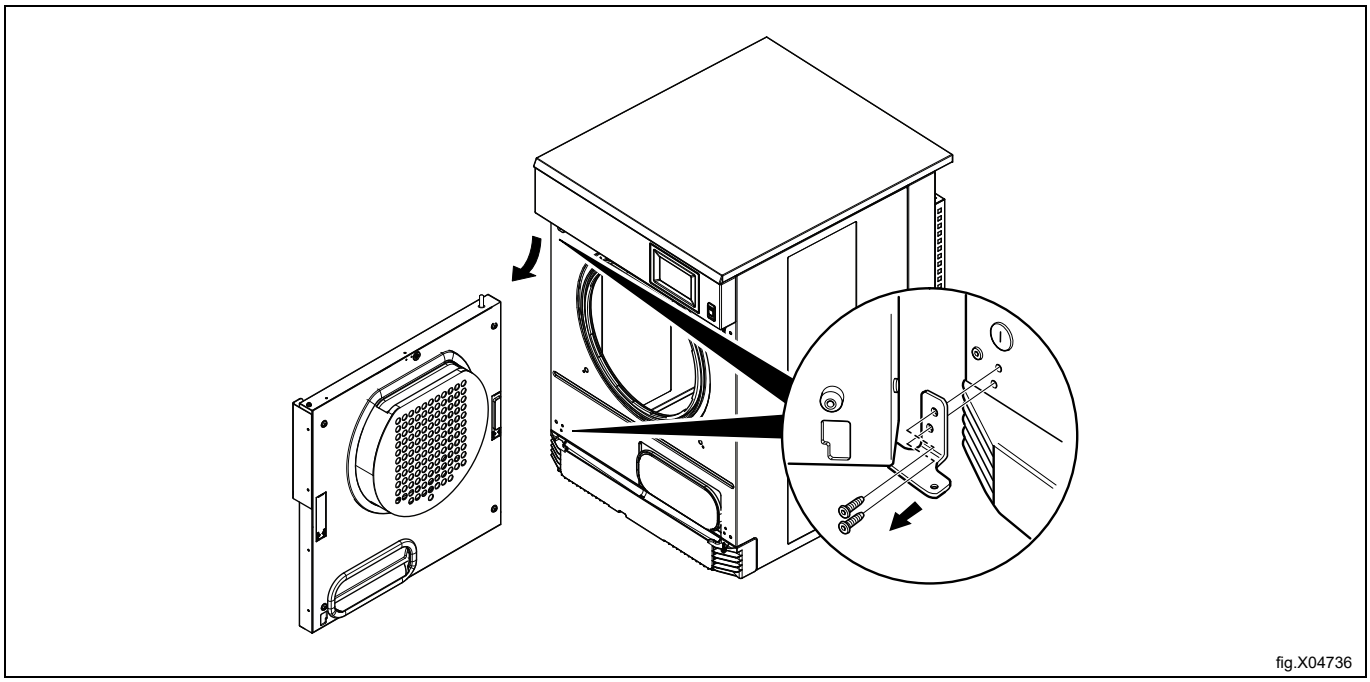
fig.X04736

- Demount the cover screws on the other side and mount them where the hinges was. Mount the hinges on the other side where the cover screws was. Mount the lower hinge soft, with one screw first, in order to make it easier to place the door back in position.

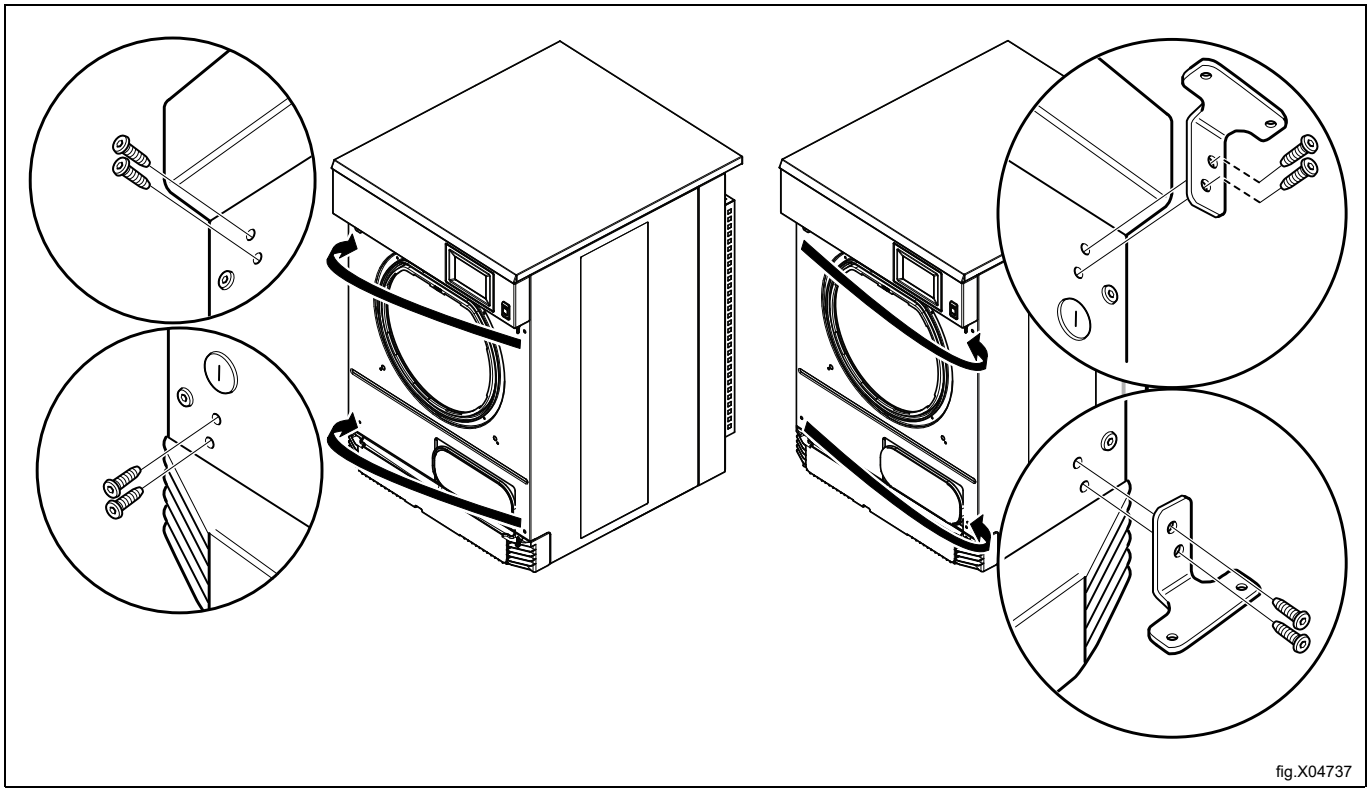
fig.X04737

- Demount the door handle and remount the screws. Mount the door handle on the opposite side using the existing screws.
- Remove the upper and lower pivot and mount them at the opposite side.

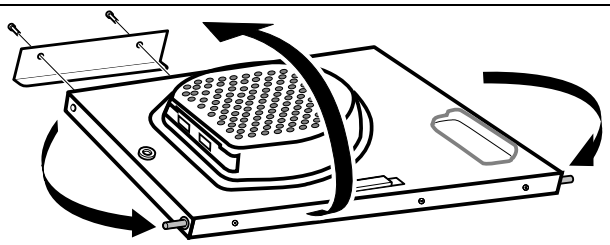

fig.W00183A

- Demount the locking panels by loosening the barb with a screwdriver.
- Press out the locking panels, swap them over and press into position.

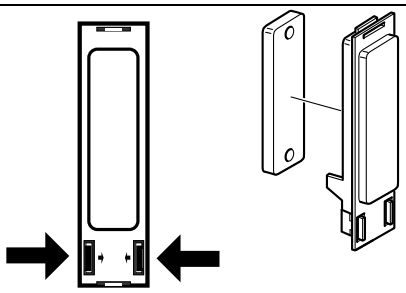

fig.W00184A

- Mount the door on the other side. Push the door and the top pivot into the upper hinge and then adjust the lower pivot into the lower hinge. Mount the remaining screw when the lower pivot is in correct position. Tighten the screws.
- Connect the power to the machine.
- Test run the machine.

# 9 Stacking kit

TD7–7 and TD7–6LAC can be stacked on top of the washer extractor WP7–6, WP7–7, WP7–8.

The following kit No. 988918497 (for WP7–6 with TD7–7, TD7–6LAC) shall be ordered and the following instructions shall be used.

The following kit No. 988918496 (for WP7–7, WP7–8 with TD7–7, TD7–6LAC) shall be ordered and the following instructions shall be used.

## 9.1 Stacking kit for WP7–6 with TD7–7, TD7–6LAC

### 9.1.1 Contents of the kit

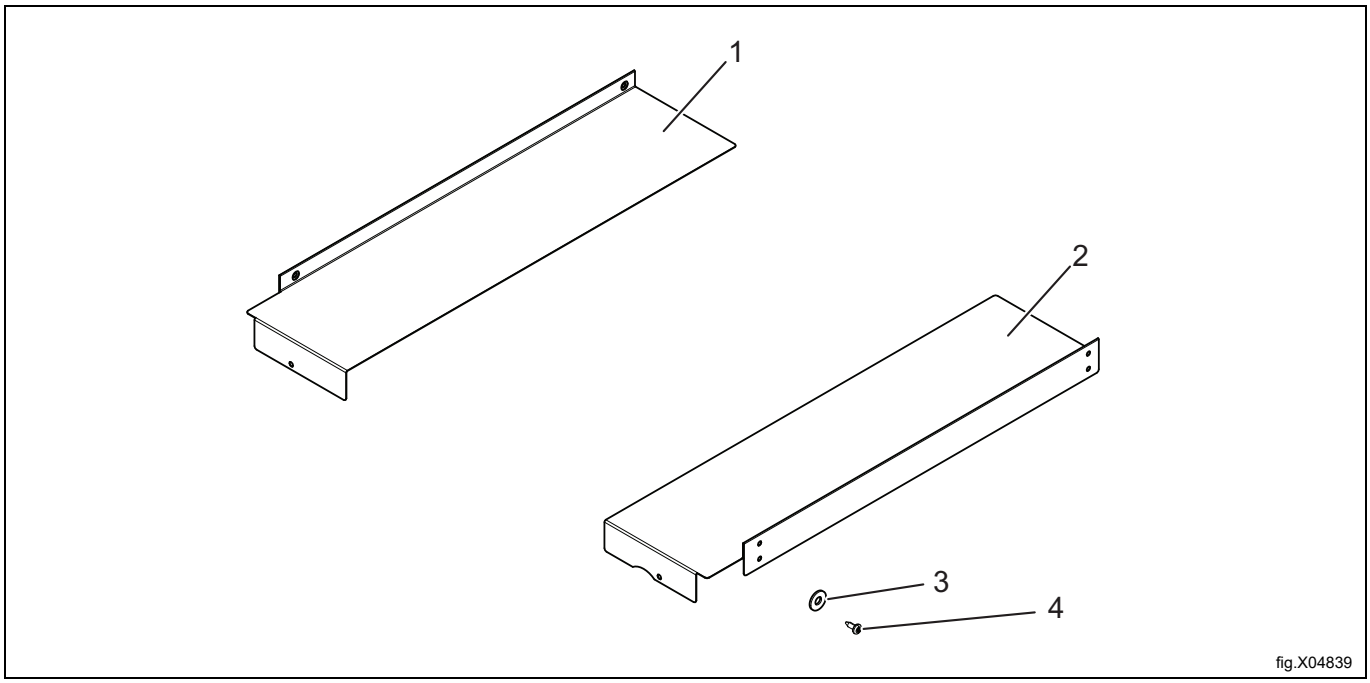


#### 9.1.1.1 Kit No. 988918497 for WP7–6 with TD7–7, TD7–6LAC

| Pos. | Part number | Description |
|---|---|---|
| 1 | 490630301 | Stacking panel right x 1 |
| 2 | 490630901 | Stacking panel left x 1 |
| 3 | 490519001 | Distance x 4 |
| 4 | 471836901 | Screw x 8 |

### 9.1.2 Installing the stacking kit

- Make sure the power is disconnected on both of the machines.
- Demount the 2 screws on the top panel of the washer extractor.

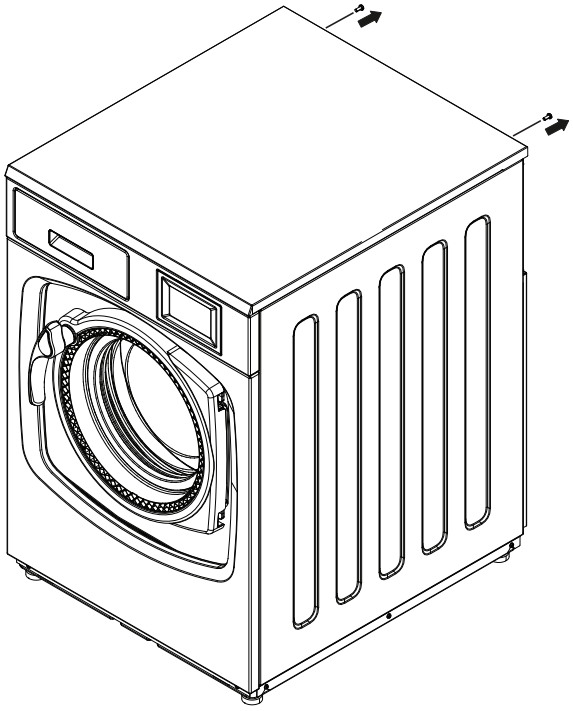

fig.X04833

- Put both of the stacking panels on top of the washer extractor. Make sure the rear of the stacking panels are completely in contact to the rear of the top panel (A).
- Mark and drill 2 holes (⌀ 3–3.3 mm) on the top panel on each side of the washer extractor (B).

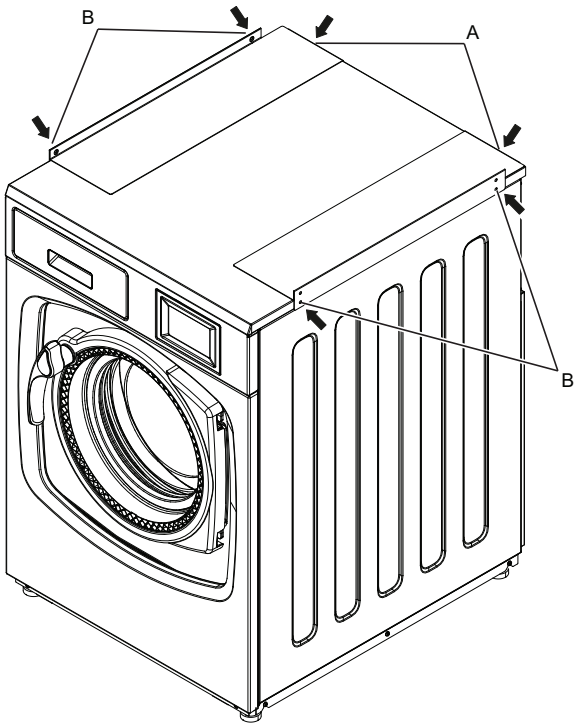


fig.X04840

- Remove the stacking panel on one side.
- Position the enclosed distances (C) underneath the stacking panel.
- Remount the screw on the rear of the washer extractor (D) and fasten the 2 screws (4) on the side (on the lower positions).

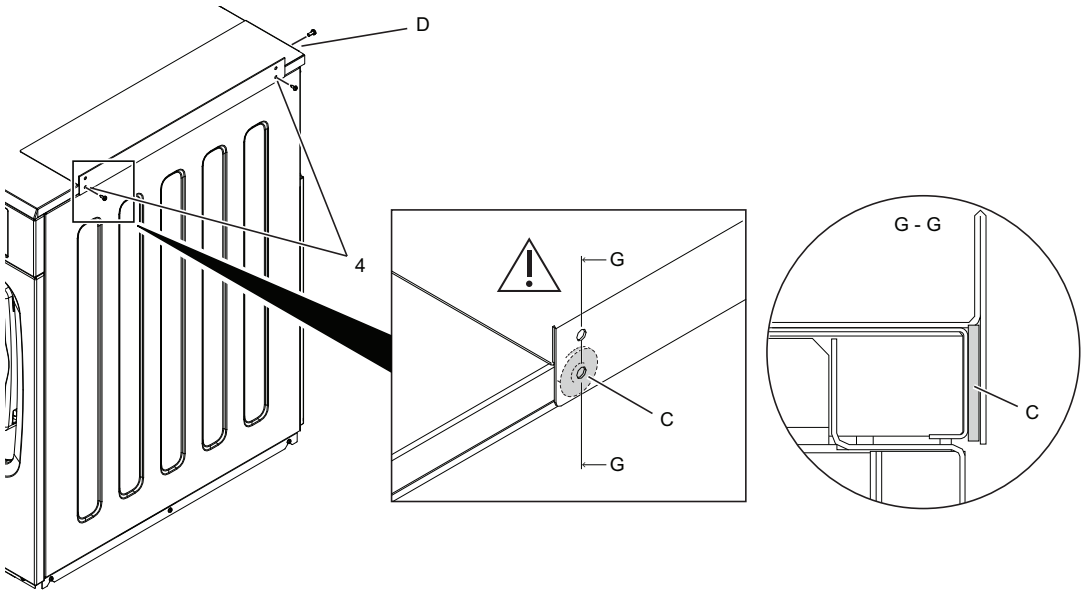


fig.X04834

- Lift and put the tumble dryer on top of the washer extractor.
- The tumble dryer should be aligned according to the illustration.

## Note!

**The weight of the tumble dryer is 58 kg.**
**It is strongly recommended to wear gloves while lifting since there can be sharp edges.**

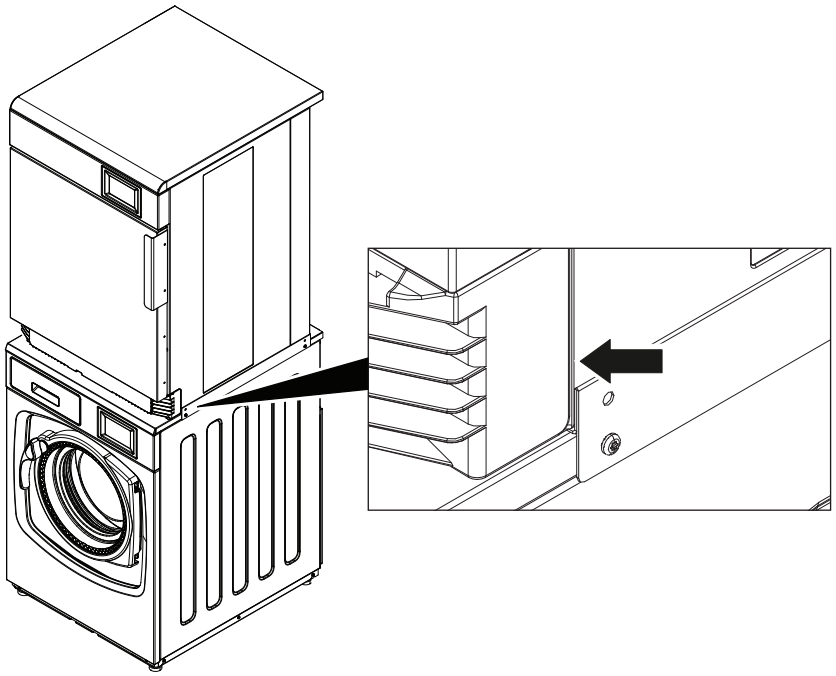

fig.X04835

- When the tumble dryer is aligned, drill the other 2 holes (⌀ 3–3.3 mm) on the side panel of the tumble dryer.
- Fasten the stacking panel to the tumble dryer with 2 screws (4).

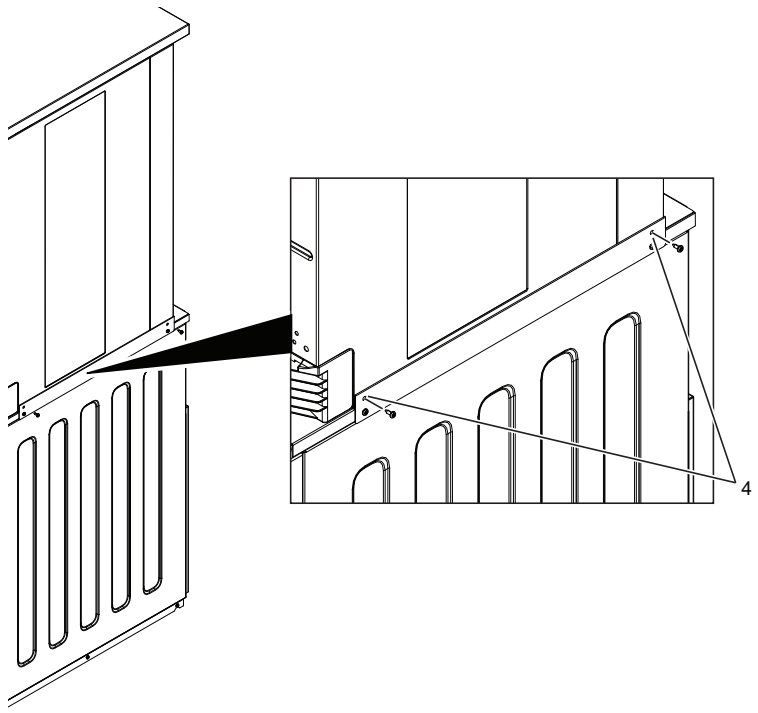


fig.X04837

When all previous steps are done, the other stacking panel can be mounted on the machine in similar procedure.

Note that it does not matter which side / stacking panel you start with. This instruction shows start from the right side (seen from the front of the machine).

- Position the distances to the drilled holes on the top panel of the washer extractor. (They shall be underneath the stacking panel).
- Carefully tilt the upper tumble dryer just a little bit and slide the other stacking panel under it. Make sure it is in position.

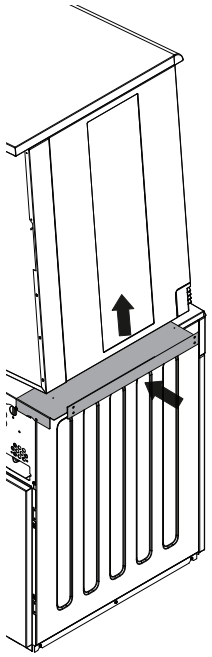

fig.X04838

- Remount the screw on the rear of the washer extractor (E) and fasten the 2 screws (4) on the side (on the lower positions that was drilled before).
- When the tumble dryer is aligned (F), drill the other 2 holes (⌀ 3–3.3 mm) on the tumble dryer.
- Fasten the stacking panel to the tumble dryer with 2 screws (4).

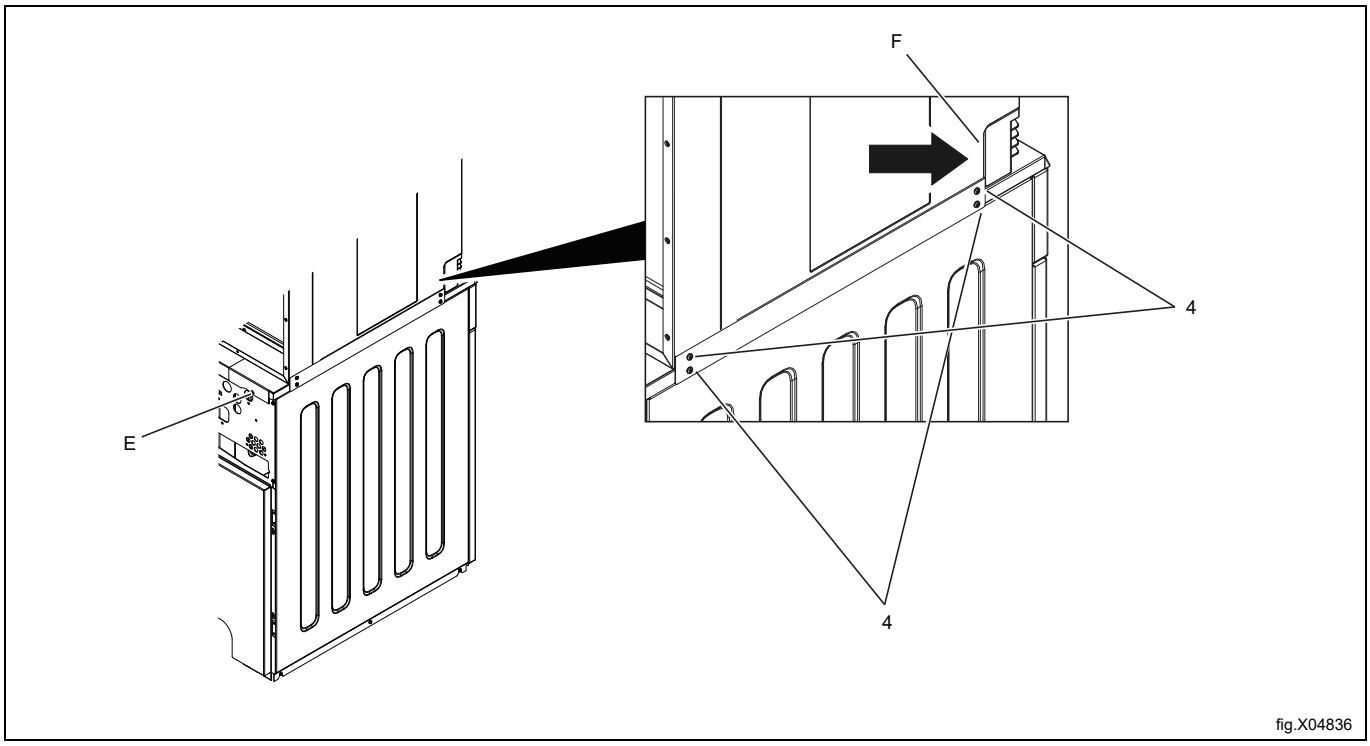


- Connect the power and perform a function test on the machines.

## Note!

**The machine must be secured to the floor when it is installed on a ship, oil rig or wherever there is a high risk of earthquake.**
**The secure brackets kit (487193545) is an alternative solution and it can be ordered separately.**

## 9.2 Stacking kit for WP7–7, WP7–8 with TD7–7, TD7–6LAC

### 9.2.1 Contents of the kit

#### 9.2.1.1 Kit No. 988918496 for WP7–7, WP7–8 with TD7–7, TD7–6LAC

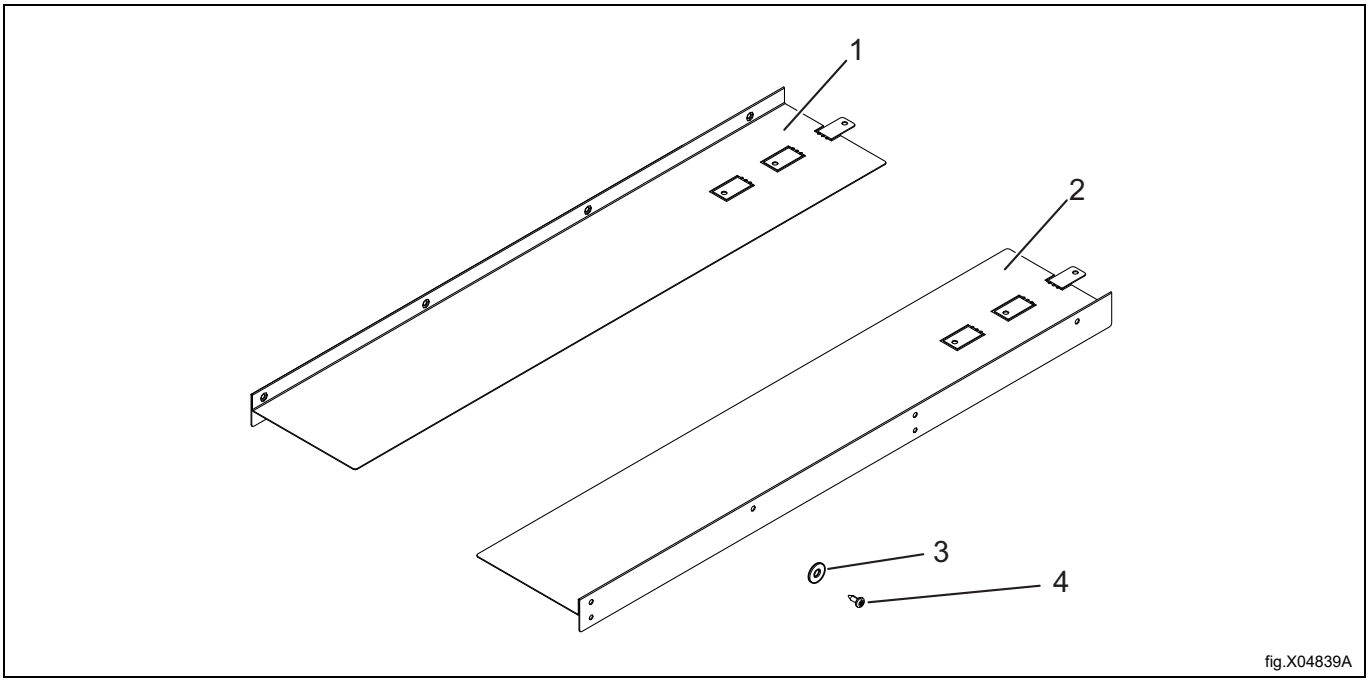


| Pos. | Part number | Description |
|---|---|---|
| 1 | 490630201 | Stacking panel left x 1 |
| 2 | 490630701 | Stacking panel right x 1 |
| 3 | 490519001 | Distance x 4 |
| 4 | 471836901 | Screw x 8 |

### 9.2.1.2 Installing the stacking kit (for WP7–7, WP7–8 with TD7–7, TD7–6LAC)

The following instructions are showing the model WP7-8 at the bottom as an example. The procedure is similar for the other models.

- With the bent stacking panel (1) and (2) at “B” 90 degrees downward, put both of the stacking panels on top of the washer extractor. Make sure the bent area “B” of the stacking panels are completely in contact to the rear of the top panel (C).
- Mark and drill 2 holes (⌀ 3–3.3 mm) on the top panel on each side of the washer extractor (D).

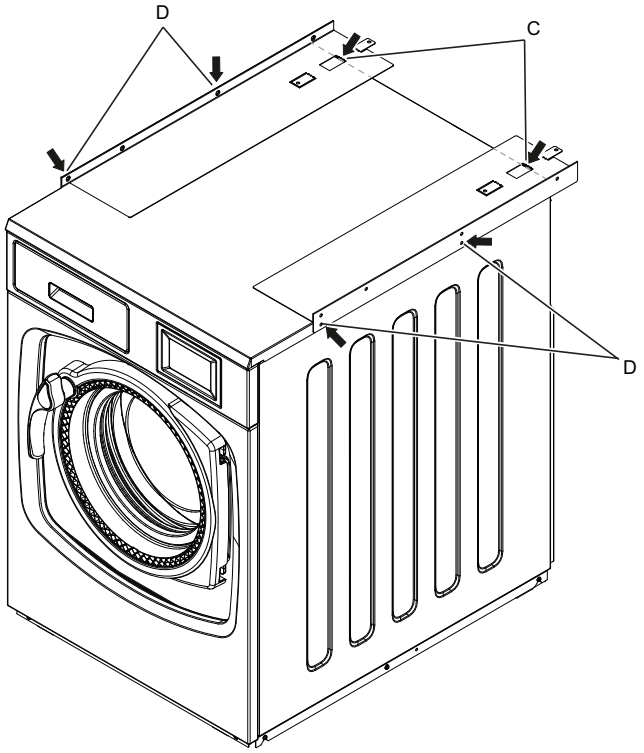


fig.X04852A

- Remove the stacking panel on one side.
- Position each distance (E) to each drilled hole on the top panel of the washer extractor. (They shall be underneath the stacking panel).
- Remount the screw on the rear of the washer extractor (F) and fasten the 2 screws (4) on the side (on the lower positions).

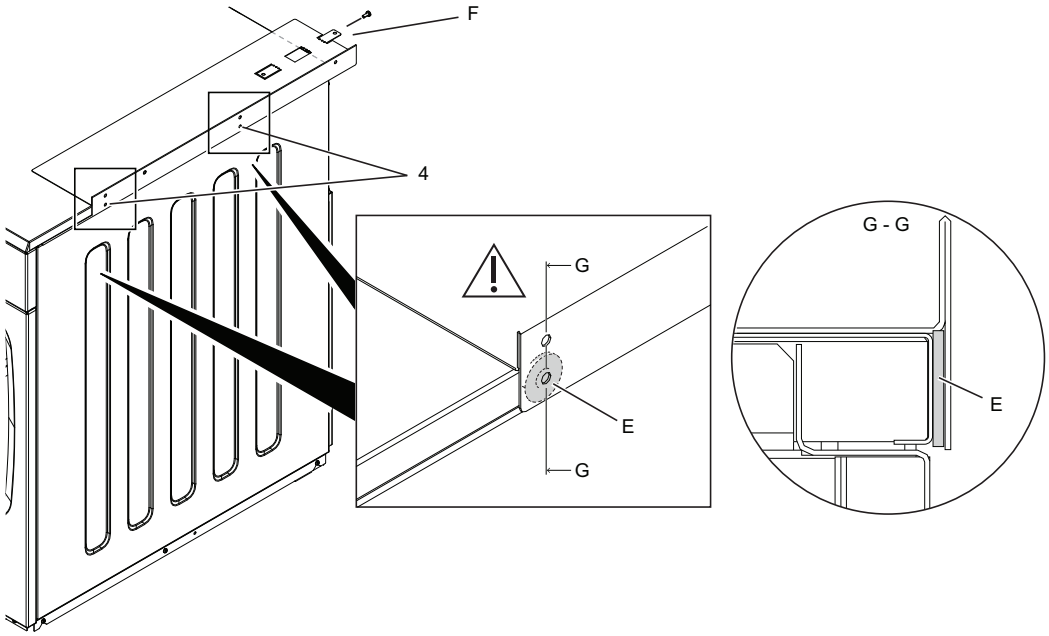


fig.X04853A

- Lift and put the tumble dryer on top of the washer extractor.
- The tumble dryer should be aligned according to the illustration.

## Note!

**The weight of the tumble dryer is 58 kg.**
**It is strongly recommended to wear gloves while lifting since there can be sharp edges.**

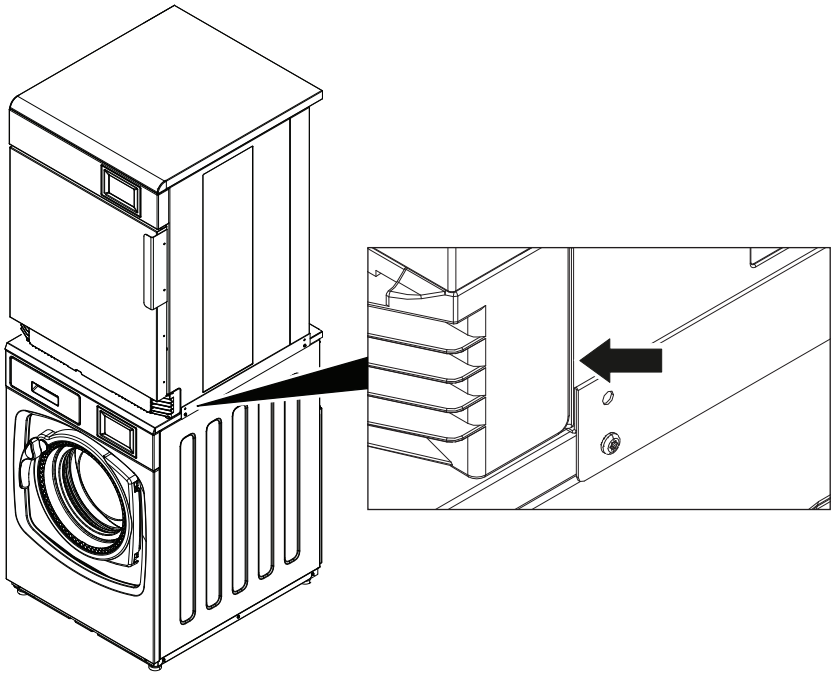

fig.X04835

- When the tumble dryer is aligned, drill the other 2 holes (⌀ 3–3.3 mm) on the side panel of the tumble dryer.
- Fasten the stacking panel to the tumble dryer with 2 screws (4).

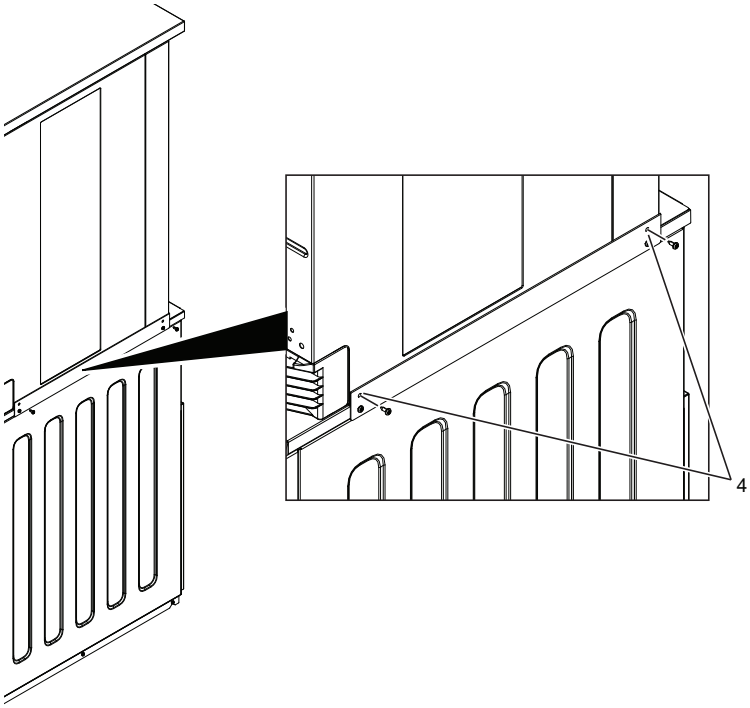


fig.X04837

When all previous steps are done, the other stacking panel can be mounted on the machine in similar procedure.

Note that it does not matter which side / stacking panel you start with. This instruction shows start from the right side (seen from the front of the machine).

- Position the distances to the drilled holes on the top panel of the washer extractor. (They shall be underneath the stacking panel).
- Carefully tilt the upper tumble dryer just a little bit and slide the other stacking panel under it. Make sure it is in position. The following illustrations show as an example.

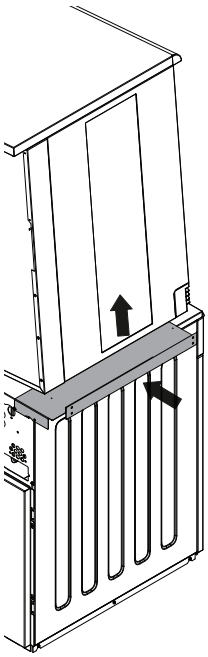

fig.X04838

- Remount the screw on the rear of the washer extractor (E) and fasten the 2 screws (4) on the side (on the lower positions that was drilled before).
- When the tumble dryer is aligned (F), drill the other 2 holes (⌀ 3–3.3 mm) on the tumble dryer.
- Fasten the stacking panel to the tumble dryer with 2 screws (4). The following illustrations show as an example.

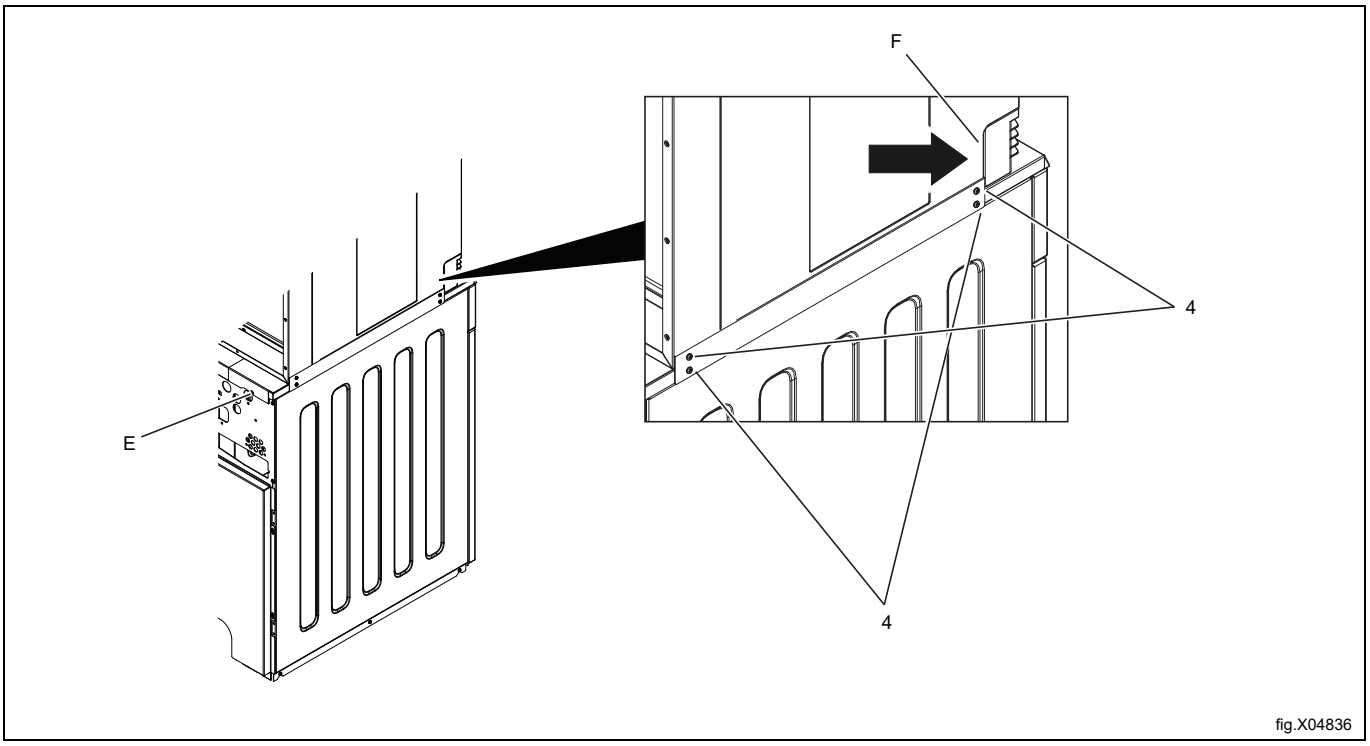


- Connect the power and perform a function test on the machines.

## Note!

**The machine must be secured to the floor when it is installed on a ship, oil rig or wherever there is a high risk of earthquake.**
**The secure brackets kit (487193545) is an alternative solution and it can be ordered separately.**

# 10 Function check

May only be carried out by qualified personnel.

A function check must be made when the installation is finished and before the machine can be ready to be used.

Whenever a repair has been made, a function check must be performed before the machine can be used again.

## 10.1 Check the automatic stop of the machine

- Start the machine.
- Check if the micro switches are working properly:
  The machine must stop if the door is opened.

## 10.2 Check the heat

- Let the machine work for five minutes on a program with heat.
- Check that the heating is working by opening the door and feel if there is heat in the drum.

## 10.3 Ready to use

If all tests are OK the machine is now ready to be used.

If some of the tests failed, or deficiencies or errors are detected, please contact your local service organisation or dealer.

# 11 Disposal information

## 11.1 Appliance recyclability and disposal

### 11.1.1 Recyclability

Our appliances are manufactured using a significant percentage of recyclable metals (such as stainless steel, iron, aluminium, galvanized sheet, copper, etc.), which can be recovered through the local recycling systems, in compliance with the regulations in force in the country of use.

National regulations regarding waste disposal may vary. Disposal of the appliance must therefore be carried out in accordance with the applicable legislation and the directives issued by the competent authorities in the country where the appliance is decommissioned.

The components of the appliance must be separated and disposed of in accordance with their material composition (e.g. metals, oils, greases, plastics, rubber, refrigerant gases, insulating boards and other insulating material, glass wool, LEDs, etc.) and in full compliance with applicable local and international waste management regulations.

Compressors may contain oils and refrigerants fluids - are special waste and has to be recycled on local bases regulations.

### 11.1.2 Procedure regarding appliance disposal and component / material recovery

This product should not simply be disposed of in the environment at the end of its life cycle; it is imperative instead either to dispose of it in accordance with local environmental regulations, or, preferably, to deliver it whole to an authorized recycling center.

All removed components, including doors and other structural parts, must be delivered together with the appliance to an authorized recycling or dismantling facility.

The dismantling/recycling center will apply state of the art technologies and methods available to them to effectively disassemble the products for best recyclability.

Note that printed circuit boards, electrical motors or other components identified in European Union legislation to be of high critical raw materials recovery potential need to be addressed specifically.

In case of doubts or questions, always refer to your reference customer care service.

Before disposing of the appliance, carefully inspect its physical condition and preservation state, checking for potential leaks of liquids or gases, as well as for broken parts that may pose hazards during handling and subsequent dismantling.

| | |
|---|---|
| | The symbol on the product indicates that this product should not be treated as domestic waste, but must be correctly disposed of in order to prevent any negative consequences for the environment and human health. For further information on the recycling of this product, contact the local dealer or agent, the customer care service or the local body responsible for waste disposal. |

**Note!**
**When dismantling the appliance, any marking, this manual and other documents concerning the appliance must be destroyed.**

## 11.2 Disposal of packing

The packing must be disposed of in compliance with the current regulations in the country where the appliance is used. All the packing materials are environmentally friendly.

They can be safely kept, recycled or burned in an appropriate waste incineration plant. Recyclable plastic parts are marked as following examples.

| | |
|---|---|
| PE | Polyethylene:<br>• Outer wrapping<br>• Instructions bag |
| PP | Polypropylene:<br>• Straps |
| PS | Polystyrene foam:<br>• Corner protectors |

Electrolux Professional AB
341 80 Ljungby, Sweden
www.electroluxprofessional.com